SELF-PRIMING ELECTRIC PUMP FOR TRANSFERRING VARIOUS LIQUIDS

INSTRUCTIONS FOR USE

16440212 - UP10-P 12V

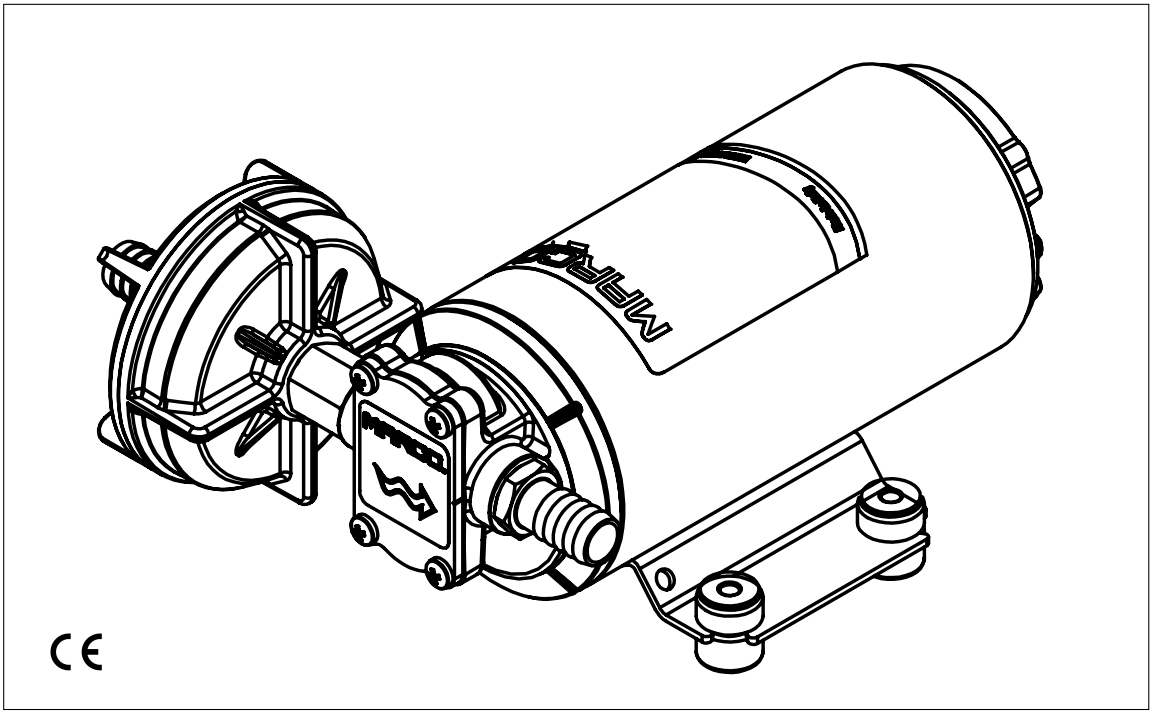

27/07/2026

© MARCO S.p.A.

© MARCO S.p.A.

END USER SAFETY INFORMATION – READ BEFORE INSTALLATION

Informazioni di sicurezza per l'utente finale – Leggere prima dell'installazione.
Sicherheitshinweise für den Endnutzer – Vor der Installation lesen.
Informations de sécurité pour l'utilisateur final – Lire avant l'installation.
Información de seguridad para el usuario final – Leer antes de la instalación.
Informações de segurança para o utilizador final – Ler antes da instalação.

This pump shall be installed, operated and maintained only by qualified personnel in accordance with the instructions. Non-compliance may result in electric shock, fire, serious injury or death.

IT: La pompa deve essere installata, utilizzata e manutenuta solo da personale qualificato secondo le istruzioni. Il mancato rispetto può causare folgorazione, incendio, lesioni gravi o morte.
DE: Die Pumpe darf nur von qualifiziertem Personal gemäß der Anleitung installiert, betrieben und gewartet werden. Nichteinhaltung kann zu Elektroschock, Brand, schweren Verletzungen oder Tod führen.
FR: La pompe ne doit être installée, utilisée et entretenue que par du personnel qualifié conformément aux instructions. Le non-respect peut entraîner électrocution, incendie, blessures graves ou mort.
ES: La bomba solo debe ser instalada, operada y mantenida por personal cualificado según las instrucciones. El incumplimiento puede provocar descarga eléctrica, incendio, lesiones graves o muerte.
PT: A bomba deve ser instalada, operada e mantida apenas por pessoal qualificado, de acordo com as instruções. O incumprimento pode causar choque eléctrico, incêndio, ferimentos graves ou morte.

Intended use. This pump is designed exclusively for pumping fresh water, salt water and diesel at ambient temperature.

IT: Questa pompa è progettata esclusivamente per acqua dolce, acqua salata e gasolio a temperatura ambiente.
DE: Diese Pumpe ist ausschließlich für S"ußwasser, Salzwasser und Diesel bei Umgebungstemperatur ausgelegt.
FR: Cette pompe est conçue exclusivement pour l'eau douce, l'eau sal'ee et le diesel à température ambiante.
ES: Esta bomba está diseñada exclusivamente para agua dulce, agua salada y gas'oleo a temperatura ambiente.
PT: Esta bomba foi concebida exclusivamente para 'agua doce, 'agua salgada e gas'oleo à temperatura ambiente.

Prohibited use. Do not use with solvents, chemical or corrosive agents, or flammable liquids. Do not use in potentially explosive atmospheres. This product is not ATEX certified. Risk of explosion, fire and serious injury.

IT: Non utilizzare con solventi, agenti chimici o corrosivi, o liquidi infiammabili. Non utilizzare in atmosfere potenzialmente esplosive. Il prodotto non è certificato ATEX. Rischio di esplosione, incendio e lesioni gravi.
DE: Nicht mit Lösungsmitteln, chemischen oder korrosiven Stoffen oder brennbaren Flüssigkeiten verwenden. Nicht in explosionsgefährdeter Atmosphäre verwenden. Das Produkt ist nicht ATEX-zertifiziert. Explosions-, Brand- und Verletzungsgefahr.
FR: Ne pas utiliser avec des solvants, des agents chimiques ou corrosifs, ni des liquides inflammables. Ne pas utiliser en atmosphère potentiellement explosive. Ce produit n'est pas certifié ATEX. Risque d'explosion, d'incendie et de blessures graves.
ES: No utilizar con disolventes, agentes químicos o corrosivos, ni líquidos inflamables. No utilizar en atmósferas potencialmente explosivas. Este producto no está certificado ATEX. Riesgo de explosión, incendio y lesiones graves.
PT: Não utilizar com solventes, agentes químicos ou corrosivos, nem líquidos inflamáveis. Não utilizar em atmosferas potencialmente explosivas. O produto não é certificado ATEX. Risco de explosão, incêndio e lesões graves.

High temperature. The motor and pump may reach high surface temperatures during or after operation. Avoid contact.

IT: Il motore e la pompa possono raggiungere elevate temperature superficiali durante o dopo il funzionamento. Evitare il contatto.
DE: Motor und Pumpe können während oder nach dem Betrieb hohe Oberflächentemperaturen erreichen. Kontakt vermeiden.
FR: Le moteur et la pompe peuvent atteindre des températures de surface élevées pendant ou après le fonctionnement. Éviter tout contact.
ES: El motor y la bomba pueden alcanzar temperaturas superficiales elevadas durante o después del funcionamiento. Evitar el contacto.
PT: O motor e a bomba podem atingir temperaturas superficiais elevadas durante ou após o funcionamento. Evitar o contacto.

Isolation from supply. Before any installation, inspection, cleaning or maintenance, disconnect the pump from the mains supply.

IT: Prima di installazione, ispezione, pulizia o manutenzione, disconnettere la pompa dalla rete.
DE: Vor Installation, Prüfung, Reinigung oder Wartung die Pumpe vom Netz trennen.

© MARCO S.p.A.

FR: Avant toute installation, inspection, nettoyage ou maintenance, débrancher la pompa du réseau.
ES: Antes de cualquier instalación, inspección, limpieza o mantenimiento, desconectar la bomba de la red.
PT: Antes de qualquer instalação, inspeção, limpeza ou manutenção, desligar a bomba da rede.

Protective covers. Do not remove the protective covers while the motor is in operation.
IT: Non rimuovere le protezioni mentre il motore è in funzione.
DE: Schutzabdeckungen nicht entfernen, während der Motor in Betrieb ist.
FR: Ne pas retirer les protections pendant que le moteur est en marche.
ES: No retirar las protecciones mientras el motor está en funcionamiento.
PT: Não remover as proteções enquanto o motor estiver em funcionamento.

Moving parts. Do not insert fingers or objects into moving parts (e.g. drive or gears).
IT: Non inserire dita o oggetti nelle parti in movimento (es. trasmissione o ingranaggi).
DE: Keine Finger oder Gegenstände in bewegte Teile (z. B. Antrieb oder Getriebe) einführen.
FR: Ne pas introduire doigts ou objets dans les pièces en mouvement (ex. transmission ou engrenages).
ES: No introducir dedos u objetos en partes móviles (ej. transmisión o engranajes).
PT: Não introduzir dedos ou objectos em partes em movimento (ex. transmissão ou engrenagens).

Electrical installation. Install a correctly rated fuse and switch in accordance with the pump electrical specifications. Protect cables from mechanical damage, heat and moisture.
IT: Installare fusibile e interruttore adeguati secondo le specifiche elettriche della pompa. Proteggere i cavi da danni meccanici, calore e umidità.
DE: Sicherung und Schalter gemäß den elektrischen Daten der Pumpe einbauen. Kabel vor mechanischer Beschädigung, Hitze und Feuchtigkeit schützen.
FR: Installer un fusible et un interrupteur adaptés selon les spécifications électriques de la pompe. Protéger les câbles des dommages mécaniques, chaleur et humidité.
ES: Instalar fusible e interruptor adecuados según las especificaciones eléctricas de la bomba. Proteger los cables de daños mecánicos, calor y humedad.
PT: Instalar fusível e interruptor adequados conforme às especificações eléctricas da bomba. Proteger os cabos de danos mecânicos, calor e humidade.

No modifications. Do not modify the pump or its electrical connections.
IT: Non modificare la pompa né le sue connessioni elettriche.
DE: Pumpe und elektrische Anschlüsse nicht verändern.
FR: Ne pas modifier la pompe ni ses connexions électriques.
ES: No modificar la bomba ni sus conexiones eléctricas.
PT: Não modificar a bomba nem as suas ligações eléctricas.

Cable sizing. Size the cable section correctly according to cable length, in compliance with local regulations.
IT: Dimensionare correttamente la sezione dei cavi in funzione della loro lunghezza, in conformità con le normative locali.
DE: Kabelquerschnitt in Abhängigkeit der Kabellänge korrekt dimensionieren, in Übereinstimmung mit den lokalen Vorschriften.
FR: Dimensionner correctement la section des câbles en fonction de leur longueur, conformément à la réglementation locale.
ES: Dimensionar correctamente la sección de los cables según su longitud, de conformidad con la normativa local.
PT: Dimensionar correctamente a secção dos cabos em função do seu comprimento, em conformidade com a regulamentação local.

For machinery manufacturers / integrators: see next page.
IT: Per costruttori di macchine / integratori: vedere pagina successiva.
DE: Für Maschinenhersteller / Integratoren: siehe nächste Seite.
FR: Pour constructeurs de machines / intégrateurs : voir page suivante.
ES: Para fabricantes de máquinas / integradores: ver página siguiente.
PT: Para fabricantes de máquinas / integradores: ver página seguinte.

© MARCO S.p.A.

INFORMATION FOR MACHINERY MANUFACTURERS – INTEGRATION

Informazioni per i costruttori di macchine – Integrazione.
Informationen für Maschinenhersteller – Integration.
Informations pour les constructeurs de machines – Intégration.
Información para fabricantes de máquinas – Integración.
Informação para fabricantes de máquinas – Integração.

This product may be integrated into machinery. When integrated, the pump may be operated with liquids and/or at temperatures other than those stated in the end-user safety page, under the sole responsibility of the machine manufacturer. The machine manufacturer shall ensure compliance with Directive 2006/42/EC and all applicable safety requirements for the final assembly.

IT: Questo prodotto può essere integrato in un macchinario. In integrazione la pompa può essere impiegata con liquidi e/o a temperature diversi da quelli indicati nella pagina di sicurezza per l'utente finale, sotto la sola responsabilità del costruttore della macchina. Il costruttore della macchina deve garantire la conformità alla Direttiva 2006/42/CE e a tutti i requisiti di sicurezza applicabili all'assemblaggio finale.

DE: Dieses Produkt kann in eine Maschine integriert werden. Bei Integration darf die Pumpe mit anderen Flüssigkeiten und/oder bei anderen Temperaturen als auf der Sicherheitsseite für Endnutzer angegeben betrieben werden, unter alleiniger Verantwortung des Maschinenherstellers. Der Maschinenhersteller muss die Einhaltung der Richtlinie 2006/42/EG und aller geltenden Sicherheitsanforderungen für die Gesamtanlage gewährleisten.

FR: Ce produit peut être intégré dans une machine. En intégration, la pompe peut être utilisée avec des liquides et/ou à des températures différents de ceux indiqués dans la page sécurité pour l'utilisateur final, sous la seule responsabilité du constructeur de la machine. Le constructeur doit assurer la conformité à la Directive 2006/42/CE et à toutes les exigences de sécurité applicables à l'assemblage final.

ES: Este producto puede integrarse en una máquina. En integración, la bomba puede funcionar con líquidos y/o a temperaturas distintos de los indicados en la página de seguridad para el usuario final, bajo la exclusiva responsabilidad del fabricante de la máquina. El fabricante debe garantizar el cumplimiento de la Directiva 2006/42/CE y de todos los requisitos de seguridad aplicables al conjunto final.

PT: Este produto pode ser integrado numa máquina. Em integração, a bomba pode ser utilizada com líquidos e/ou a temperaturas diferentes dos indicados na página de segurança para o utilizador final, sob a única responsabilidade do fabricante da máquina. O fabricante deve garantir a conformidade com a Directiva 2006/42/CE e todos os requisitos de segurança aplicáveis ao conjunto final.

Qualified personnel. For the purposes of these instructions, "qualified personnel" means persons with adequate technical knowledge and training in the installation, operation and maintenance of machinery and electrical equipment.

IT: Per le presenti istruzioni, per "personale qualificato" si intende personale con adeguate conoscenze tecniche e formazione in materia di installazione, uso e manutenzione di macchinari e apparecchiature elettriche.

DE: Im Sinne dieser Anleitung bezeichnet "qualifiziertes Personal" Personen mit ausreichenden technischen Kenntnissen und Schulung in Installation, Betrieb und Wartung von Maschinen und elektrischen Anlagen.

FR: Aux fins des présentes instructions, "personnel qualifié" désigne les personnes ayant les connaissances techniques et la formation nécessaires pour l'installation, l'utilisation et la maintenance des machines et équipements électriques.

ES: A efectos de estas instrucciones, "personal cualificado" designa a las personas con conocimientos técnicos y formación adecuados en instalación, uso y mantenimiento de máquinas y equipos eléctricos.

PT: Para os efeitos destas instruções, "pessoal qualificado" designa pessoas com conhecimentos técnicos e formação adequados em instalação, utilização e manutenção de máquinas e equipamentos eléctricos.

Warranty and suitability. MARCO S.p.A. does not warrant the suitability of this pump for fluids, temperatures or operating conditions other than those stated for standalone use in the end-user safety page, unless otherwise agreed in writing.

IT: MARCO S.p.A. non garantisce l'idoneità di questa pompa per fluidi, temperature o condizioni operative diverse da quelle indicate per l'uso autonomo nella pagina di sicurezza per l'utente finale, salvo diverso accordo scritto.

DE: MARCO S.p.A. garantiert nicht die Eignung dieser Pumpe für andere Flüssigkeiten, Temperaturen oder Betriebsbedingungen als die für den eigenständigen Gebrauch auf der Endnutzer-Sicherheitsseite angegebenen, sofern nicht schriftlich anders vereinbart.

FR: MARCO S.p.A. ne garantit pas l'aptitude de cette pompe pour d'autres fluides, températures ou conditions de fonctionnement que ceux indiqués pour l'usage autonome sur la page sécurité utilisateur final, sauf accord écrit contraire.

ES: MARCO S.p.A. no garantiza la idoneidad de esta bomba para otros fluidos, temperaturas o condiciones de funcionamiento que los indicados para uso autónomo en la página de seguridad del usuario final, salvo acuerdo escrito en contrario.

PT: A MARCO S.p.A. não garante a idoneidade desta bomba para fluidos, temperaturas ou condições de funcionamento

© MARCO S.p.A.

diferentes das indicadas para uso autónomo na página de segurança do utilizador final, salvo acordo escrito em contrário.

Handover of instructions. The machinery manufacturer (integrator) must provide this manual to the end user and ensure that the pump is used only in accordance with the instructions contained herein.

IT: Il costruttore della macchina (integratore) deve consegnare il presente manuale all'utilizzatore finale e garantire che la pompa sia utilizzata solo conformemente alle istruzioni in esso contenute.

DE: Der Maschinenhersteller (Integrator) muss diese Anleitung dem Endnutzer übergeben und sicherstellen, dass die Pumpe nur gemäß den darin enthaltenen Anweisungen verwendet wird.

FR: Le constructeur de la machine (intégrateur) doit remettre ce manuel à l'utilisateur final et s'assurer que la pompe n'est utilisée que conformément aux instructions qu'il contient.

ES: El fabricante de la máquina (integrador) debe entregar este manual al usuario final y asegurar que la bomba se utilice únicamente de acuerdo con las instrucciones contenidas en él.

PT: O fabricante da máquina (integrador) deve entregar este manual ao utilizador final e garantir que a bomba seja utilizada apenas em conformidade com as instruções nele contidas.

Partly completed machinery. When this pump is supplied as partly completed machinery, MARCO S.p.A. provides a declaration of incorporation. The assembly instructions in this manual describe the conditions that must be met for correct incorporation into the final product so that safety and health are not compromised.

IT: Quando la pompa è fornita come macchina parzialmente completata, MARCO S.p.A. fornisce una dichiarazione di incorporazione. Le istruzioni di montaggio nel presente manuale descrivono le condizioni da soddisfare per una corretta incorporazione nel prodotto finito, senza compromettere sicurezza e salute.

DE: Wird diese Pumpe als unvollständige Maschine geliefert, stellt MARCO S.p.A. eine Einbauerklärung aus. Die Montageanleitungen in dieser Anleitung beschreiben die Bedingungen für den sicheren Einbau in das Endprodukt.

FR: Lorsque cette pompe est fournie comme machine partiellement complétée, MARCO S.p.A. fournit une déclaration d'incorporation. Les instructions de montage du présent manuel décrivent les conditions à respecter pour une incorporation correcte dans le produit final.

ES: Cuando esta bomba se suministra como máquina parcialmente completada, MARCO S.p.A. facilita una declaración de incorporación. Las instrucciones de montaje en este manual describen las condiciones para una correcta incorporación al producto final.

PT: Quando esta bomba é fornecida como máquina parcialmente concluída, a MARCO S.p.A. fornece uma declaração de incorporação. As instruções de montagem neste manual descrevem as condições para uma correcta incorporação no produto final.

Residual risks – The following residual risks must be addressed by the machine manufacturer when integrating the pump:

IT: I seguenti rischi residui devono essere affrontati dal costruttore della macchina in fase di integrazione della pompa:

DE: Die folgenden Restrisiken müssen vom Maschinenhersteller bei der Integration der Pumpe berücksichtigt werden:

FR: Les risques résiduels suivants doivent être traités par le constructeur de la machine lors de l'intégration de la pompe :

ES: Los siguientes riesgos residuales deben ser abordados por el fabricante de la máquina al integrar la bomba :

PT: Os seguintes riscos residuais devem ser tratados pelo fabricante da máquina ao integrar a bomba:

Explosive atmospheres. This product is not intended for use in potentially explosive atmospheres (not ATEX certified). The machine manufacturer must not integrate the pump in such applications unless otherwise certified.

IT: Questo prodotto non è destinato all'uso in atmosfere potenzialmente esplosive (non certificato ATEX). Il costruttore della macchina non deve integrare la pompa in tali applicazioni salvo diversa certificazione.

DE: Dieses Produkt ist nicht für den Einsatz in explosionsgefährdeter Atmosphäre bestimmt (nicht ATEX-zertifiziert). Der Maschinenhersteller darf die Pumpe nicht in solchen Anwendungen integrieren, sofern nicht zertifiziert.

FR: Ce produit n'est pas destiné à une utilisation en atmosphère potentiellement explosive (non certifié ATEX). Le constructeur ne doit pas intégrer la pompe dans de telles applications sauf certification.

ES: Este producto no está destinado al uso en atmósferas potencialmente explosivas (no certificado ATEX). El fabricante de la máquina no debe integrar la bomba en dichas aplicaciones salvo certificación.

PT: Este produto não se destina a utilização em atmosferas potencialmente explosivas (não certificado ATEX). O fabricante da máquina não deve integrar a bomba nestas aplicações salvo certificação.

High temperature on motor. The motor may reach high surface temperatures during operation. Prevent contact by the user (e.g. by guards or positioning).

IT: Il motore può raggiungere elevate temperature superficiali in funzionamento. Impedire il contatto da parte dell'utilizzatore (es. con protezioni o posizionamento).

DE: Der Motor kann im Betrieb hohe Oberflächentemperaturen erreichen. Benutzerkontakt verhindern (z. B. durch Schutzvorrichtungen oder Anordnung).

FR: Le moteur peut atteindre des températures de surface élevées en fonctionnement. Empêcher tout contact par l'utilisateur (ex. par garde-fous ou positionnement).

ES: El motor puede alcanzar temperaturas superficiales elevadas en funcionamiento. Impedir el contacto por parte del usuario (ej. mediante protecciones o posicionamiento).

© MARCO S.p.A.

PT: O motor pode atingir temperaturas superficiais elevadas em funcionamento. Impedir o contacto por parte do utilizador (ex. com proteções ou posicionamento).

Liquid above 60 °C. If the pumped liquid is or can be at a temperature above 60 °C, the machine manufacturer must prevent the user from being scalded (e.g. by guarding hot surfaces, insulating pipes, or clear marking and instructions).

IT: Se il liquido pompato è o può essere a temperatura superiore a 60 °C, il costruttore della macchina deve impedire che l'utilizzatore si scotti (es. proteggendo le superfici calde, isolando le tubazioni o con marcatura e istruzioni chiare).

DE: Wenn die geförderte Flüssigkeit 60 °C übersteigt oder übersteigen kann, muss der Maschinenhersteller Verbrühungen verhindern (z. B. durch Abschirmung heißer Oberflächen, Isolierung von Leitungen oder klare Kennzeichnung und Anweisungen).

FR: Si le liquide pompé est ou peut être à une température supérieure à 60 °C, le constructeur doit empêcher les brûlures (ex. en protégeant les surfaces chaudes, en isolant les canalisations ou par marquage et instructions claires).

ES: Si el líquido bombeado es o puede estar a más de 60 °C, el fabricante de la máquina debe impedir que el usuario sufra escaldaduras (ej. protegiendo superficies calientes, aislando tuberías o con marcado e instrucciones claras).

PT: Se o líquido bombeado estiver ou puder estar a temperatura superior a 60 °C, o fabricante da máquina deve impedir que o utilizador sofra queimaduras (ex. protegendo superfícies quentes, isolando tubagens ou com marcação e instruções claras).

Chemical or aggressive liquids. If the pump is used with chemical or aggressive liquids, the machine manufacturer must protect the user from accidental contact (e.g. by containment, guards, personal protective equipment requirements, or clear instructions).

IT: Se la pompa è utilizzata con liquidi chimici o aggressivi, il costruttore della macchina deve proteggere l'utilizzatore dal contatto accidentale (es. con contenimento, protezioni, obbligo di DPI o istruzioni chiare).

DE: Bei Verwendung mit chemischen oder aggressiven Flüssigkeiten muss der Maschinenhersteller den Benutzer vor unbeabsichtigtem Kontakt schützen (z. B. durch Eindämmung, Schutzvorrichtungen, Vorgabe von PSA oder klare Anweisungen).

FR: Si la pompe est utilisée avec des liquides chimiques ou agressifs, le constructeur doit protéger l'utilisateur contre tout contact accidentel (ex. confinement, protecteurs, exigence d'équipements de protection individuelle ou instructions claires).

ES: Si la bomba se utiliza con líquidos químicos o agresivos, el fabricante de la máquina debe proteger al usuario del contacto accidental (ej. confinamiento, protecciones, obligación de EPI o instrucciones claras).

PT: Se a bomba for utilizada com líquidos químicos ou agressivos, o fabricante da máquina deve proteger o utilizador do contacto acidental (ex. confinamento, proteções, exigência de EPI ou instruções claras).

Safe disposal of liquids. When the pump is used with dangerous liquids (e.g. hot, toxic, corrosive) or with liquid above 60 °C, the machine manufacturer must provide for safe collection and disposal of drained or leaked liquid. The user is responsible for safe disposal; the pump may include splash guards, but disposal arrangements are at the integrator's or user's responsibility.

IT: Se la pompa è utilizzata con liquidi pericolosi (es. caldi, tossici, corrosivi) o con liquido oltre 60 °C, il costruttore della macchina deve prevedere la raccolta e lo smaltimento in sicurezza del liquido drenato o fuoriuscito. Lo smaltimento è a cura dell'utilizzatore; la pompa può prevedere protezioni antischizzo, ma le modalità di smaltimento sono responsabilità dell'integratore o dell'utilizzatore.

DE: Bei Verwendung mit gefährlichen Flüssigkeiten oder Flüssigkeit über 60 °C muss der Maschinenhersteller die sichere Sammlung und Entsorgung von abgelassenen oder ausgetretenen Flüssigkeiten sicherstellen. Die Entsorgung obliegt dem Benutzer.

FR: En cas d'utilisation avec des liquides dangereux ou à plus de 60 °C, le constructeur doit prévoir la collecte et l'évacuation en sécurité des liquides drainés ou fuits. L'utilisateur est responsable de l'évacuation.

ES: Si la bomba se utiliza con líquidos peligrosos o por encima de 60 °C, el fabricante debe prever la recogida y eliminación segura del líquido drenado o fugado. La eliminación es responsabilidad del usuario.

PT: Se a bomba for utilizada com líquidos perigosos ou acima de 60 °C, o fabricante da máquina deve prever a recolha e eliminação em segurança do líquido drenado ou derramado. A eliminação é da responsabilidade do utilizador.

© MARCO S.p.A.

DESCRIPTION

Self-priming electric pumps for transferring of liquids up to 5 bar pressure. Pump body in nickel-plated brass. Main application: high pressure spraying.

TECHNICAL DETAILS

PRODUCT DATA				
CODE	TYPE	DESCRIPTION	WEIGHT	
16440212	UP10-P	UP10-P heavy duty pump 18 l/min - PEEK gears - FKM O-Rings	kg	3,8
			lb	8.4

MOTOR DATA						
VOLTAGE [V]	MAX AMPERAGE [A]	FUSE [A]	MOTOR POWER [W]	IP PROTEC-TION	WIRE	
12 DC	27	25	360	67	mm^2	2,5
					AWG	14

PUMP DATA						
SELF-PRIMING [m]	MAX FLOW RATE [l/min]	MAX PRESSURE [bar]	HOSE [mm]	SEAL	O-RING	PORTS [BSPP]
3	18	5	13	HNBR	FKM	3/8"

PUMP DATA (USA)						
SELF-PRIMING [ft]	MAX FLOW RATE [gpm]	MAX PRESSURE [psi]	HOSE [in]	SEAL	O-RING	PORTS [BSPP]
9.8	4.8	72.5	0.5	HNBR	FKM	3/8"

FLUIDS ALLOWED / NOT ALLOWED

LIQUIDS		***DANGERS*** ⚠				
WARRANTY EXPIRES IF MAX FLUID TEMPERATURE IS EXCEEDED		FIRE / EXPLOSION	MOTOR OVERHEATING	PUMP CORROSION	INJURY TO PERSONNEL	DAMAGE TO SEALS
OK	WATER (max 60 °C) [1]					
	DIESEL FUEL [1]					
NO	PETROL (GASOLINE)	●			●	
	SOLVENTS	●			●	●
	FLAMMABLE LIQUIDS with PM < 38 °C	●				
	LIQUIDS WITH VISCOSITY > 20 cSt		●			
	CORROSIVE CHEMICAL PRODUCTS			●	●	●
Minimum flashpoint for any liquid (PM): 38 °C						
ISO 8846 Compliant Device						

[1] In case of liquids classified as aggressive, toxic, or hazardous to health, it is essential to design the system in compliance with Directive 2006/42/EC and provide adequate protection to prevent injury in the event of accidental liquid leakage. Mechanical components are capable of withstanding temperatures above 120°C, but it is recommended to consult MARCO S.p.A. to assess any potential critical issues. Always ensure that the fluid to be pumped is compatible with the pump construction materials. MARCO S.p.A. is not responsible for user errors.

© MARCO S.p.A.

AMBIENT CONDITIONS

TEMPERATURE: min. $-10°C/14°F$ / max. $+60°C/140°F$

WARNING: the above indicated temperature ranges are applicable to all components of the pump and these limits must be respected in order to avoid any possible damage or malfunctioning.

OPERATING CYCLE

The pump can operate on a continuous cycle with the following conditions:

⇒ pressures not exceeding 50% of the maximum pressure indicated in the technical data

⇒ temperature of the motor below $60/70°C$ - $140/158°F$

It is possible to operate at higher pressures/ampere draw if On/Off cycles are used. This will allow the motor to cool down to the indicated temperatures.
Long pipelines and / or reduced diameters, bottlenecks and dispensing guns, affect the operating pressure (which is not automatically limited): in these cases check that the pressure and the electrical draw do not exceed the values of the attached diagrams. In case of use with aggressive, sticky, or potentially incompatible liquids with the wetted parts, the pump must be flushed immediately after use. Failure to follow this procedure may cause damage to the pump and will void the warranty.

TRANSPORTATION AND HANDLING

Due to limited weight and dimensions the pump does not require the use of any special handling or lifting equipment. When handling manually, normal personal protective gear should be worn (safety shoes with toe piece, etc.). The pump is carefully packed prior to shipment. Upon receiving, the packaging should be inspected for damages and the pump stored in a dry area at a temperature between $-30°C/-22°F$ and $+70°C/158°F$.

INSTALLATION

It is recommended that the use of the pump be according to normative safety standards and also as per the precautions listed below.

PRELIMINARY CHECKS

Check that there has been no damage to the pump during transportation or storage. Both inlet and outlet ports should be carefully cleaned removing possible dust or residual packaging material. Verify that the available electrical power supply corresponds to the specification requirements.

POSITIONING

The pump can be mounted in any position. Fix the pump utilizing suitable diameter screws corresponding to the holes. To ensure the correct directional flow of the fluid as indicated by the arrow on the top plate, it is necessary to connect the positive pole (+) of the battery supply to the red wire on the motor end-cap and the negative pole (-) to the black wire. Electrical connections must be made using adequate terminal blocks and connectors ensuring a tight fitment of the electrical cables. Bad wiring can cause power losses and/or overheating of the cabling itself.

WARNING:

it is the responsibility of the installation technician to ensure a correctly designed circuit installation fitted according to regulations. Environmental risks must be taken into account with the installation.

© MARCO S.p.A.

TUBING CONNECTIONS

⇒ Prior to making any tube/hose connections, check that the inlet ports have no end caps.

⇒ Do not position the pump at a excessive height with respect to the minimum level of the fluid to be transferred. Damage may occur if this height is exceeded as the pump may not draw fluid. Make sure that the outlet tube is empty and without chokes.

⇒ Avoid choking the inlet or outlet tubes so that efficiency is optimized.

⇒ The use of an inlet filter is recommended especially with fluids containing impurities (mesh ASTM no. 35).In this case frequent cleaning and maintenance of the filter is advisable. The standard filter withstands a maximum positive pressure of 0.5 bar.

⇒ Utilize tubes and connection pieces that are resistant to the fluid types handled and avoid any possible environmental dispersion.

ELECTRICAL CONNECTION

⚠ **WARNING: DUE TO THE EMI FILTER THE PUMP IS NOT SUITABLE FOR SWITCHING APPLICATIONS (PWM DRIVER)**

The electrical installation of the pump must include a protection fuse which is suitably rated as indicated on the motor label.

WARRANTY EXPIRES IF NO FUSE IS UTILIZED

Always mount the anti vibration rubber fittings supplied with the pump kit. Their usage ensures a consistent reduction in noise and vibration levels. Electrical cabling size should depend on the distance between pump and battery/power supply (see **Motor Data Table**). The use of undersized cabling can cause overheating of the electrical wiring and subsequent fire hazard. There will also be a voltage drop at the motor terminals with a consequent reduction in efficiency. The flow rate value indicated on the motor label is obtained with internal tube diameter indicated on **Pump Data Table** . Tubes with inferior diameters will cause an increase in current with potential risk of motor overheating.

© MARCO S.p.A.

TROUBLESHOOTING

CHECK POINTS IF THE PUMP HAS STOPPED OR WILL NOT START

⇒ Check the effectiveness of the battery power supply (voltage activity).

⇒ Check if the fuse has blown.

⇒ Check for any foreign matter present in the pump body. To do this, disconnect the power supply and unscrew the four fixing screws, remove the front cover plate and inspect the chamber. Replace the cover plate in the same initial position after inspection.

⇒ Avoid running the pump dry for more than a few minutes. Pumps found defective that have run dry in the absence of fluid are not covered by warranty.

⇒ The average brush life under normal operating conditions is approximately 3,000–5,000 hours for pumps with high-speed motors and 6,000–10,000 hours for pumps with low-speed motors. After this period, the pump may stop due to brush wear.

WHY THE PUMP WILL NOT PRIME ITSELF?

⇒ The pump is fitted at an excessive height above the fluid level

⇒ The pump has run dry for too long a period

⇒ Long periods of inactivity. In this case it is advisable to add liquid directly into the chamber before start-up

⇒ Air leak at the suction pipe due to the following reasons, possible cuts in the pipe, inadequate hose clamps, malfunctioning of the filter due to defective/worn seals or filter clogged

⇒ Air leak at the front plate cover due to the following reasons, loose fixing screws, poor effectiveness of the seal

⇒ Faulty electrical cable connections

⇒ Presence of obstructions or restrictions in the suction or delivery pipes or the use of special devices (eg. automatic spray pistol or Aquastop)

⇒ Presence of liquid loops in the outlet tube

GOOD PRACTICES ENSURING A WELL FUNCTIONING PUMP

If it is expected that the pump will not be used for a period of at least 30 days, especially in the case of usage with water, it is advisable to run fresh water through it and to then loosen the front plate screws. Upon re-use, run the pump briefly (a few seconds) and tighten the screws again. Check under conditions of maximum operating pressure that the motor current value is within the motor label specifications.

© MARCO S.p.A.

NORMAL MAINTENANCE

⇒ Check frequently and keep the inlet filter clean.

⇒ Check every month the chamber and keep clean from any foreign matter.

⇒ Check every month that electrical wiring is in good condition.

INDICATORS THAT THE PUMP IS FUNCTIONING CORRECTLY

⇒ Temperature of body and motor frame is within $60°C/140°F$ and $70°C/158°F$

⇒ Regular flow and constant noise levels.

⇒ Amp-draw within the limits indicated in the diagrams.

TO OPEN THE PUMP

⇒ It is recommended that a specialized service technician be consulted for any repair work or the replacement of worn out internal components, exclusively with original spare parts; during the warranty period, only by authorized MARCO S.p.A. personnel, failing which the warranty will expire.

ENVIRONMENTAL DISPOSAL

It is the responsibility of the owner to dispose of this product by means of the specific refuse collection structures indicated by the government or the local governing authorities.

PACKAGING ENVIRONMENTAL DISPOSAL

The user is invited to effect a proper waste separation, in order to facilitate the recycling of the materials of which the packing is composed.

WARRANTY

1. The Warranty period is 2 years from date of purchase on production of the appropriate sales invoice.
2. Should the original sales invoice not be available, then the 2 year warranty period will be valid from production date.
3. The Warranty becomes null and void in the case of incorrect utilization or disregard of the instructions contained herein.
4. The Warranty only covers original production defects.
5. The Warranty does not cover any related installation costs involved.
6. Transport costs are refundable only in the case where warranty has been duly accepted by MARCO Spa and they will be limited to the actual shipment costs between MARCO Spa warehouse and the client's delivery address.
7. No credit notes or replacement items will be issued prior to the receipt and proper testing of any MARCO goods that are deemed faulty.

© MARCO S.p.A.

EXPLODED VIEW

Pos.	Q.tà	Descrizione	Description	Ricambio Spare Part
1	1	CORPO POMPA	PUMP BODY	
2	2	TIRANTE	ROD	
3	1	INDOTTO	ARMATURE	
4	1	CARCASSA	PUMP FRAME	
5	2	O-RING	O-RING	X
6	1	CALOTTA	BRUSH HOLDER	
7	1	CUSCINETTO	BALL BEARING	
8	1	ANELLO ONDULATO	COMPENSATION SPRING	
9	2	O-RING	O-RING	
10	2	RONDELLA	WASHER	
11	2	DADO	NUT	
12	1	INGRANAGGIO FOLLE	IDLE GEAR	X
13	1	LINGUETTA	KEY	
14	1	INGRANAGGIO TRAINANTE	DRIVING GEAR	
15	1	O-RING	O-RING	
16	1	PIATTELLO	TOP PLATE	
17	4	VITE	SCREW	
18	2	PORTAGOMMA	TUBE OUTLET	X
19	4	O-RING	O-RING	
20	1	NIPPLO	NIPPLE	
21	1	FILTRO	FILTER	X
22	4	ANTIVIBRANTE	ANTIVIBRATION MOUNT	X
23	4	INSERTO ANTIVIBRANTE	ANTIVIBRATION INSERT	

MONTAGGIO ANTIVIBRANTI
ANTIVIBRATION MOUNT

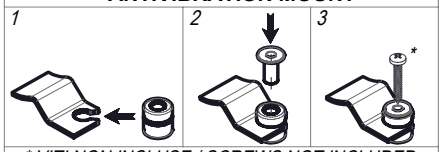

** VITI NON INCLUSE / SCREWS NOT INCLUDED*

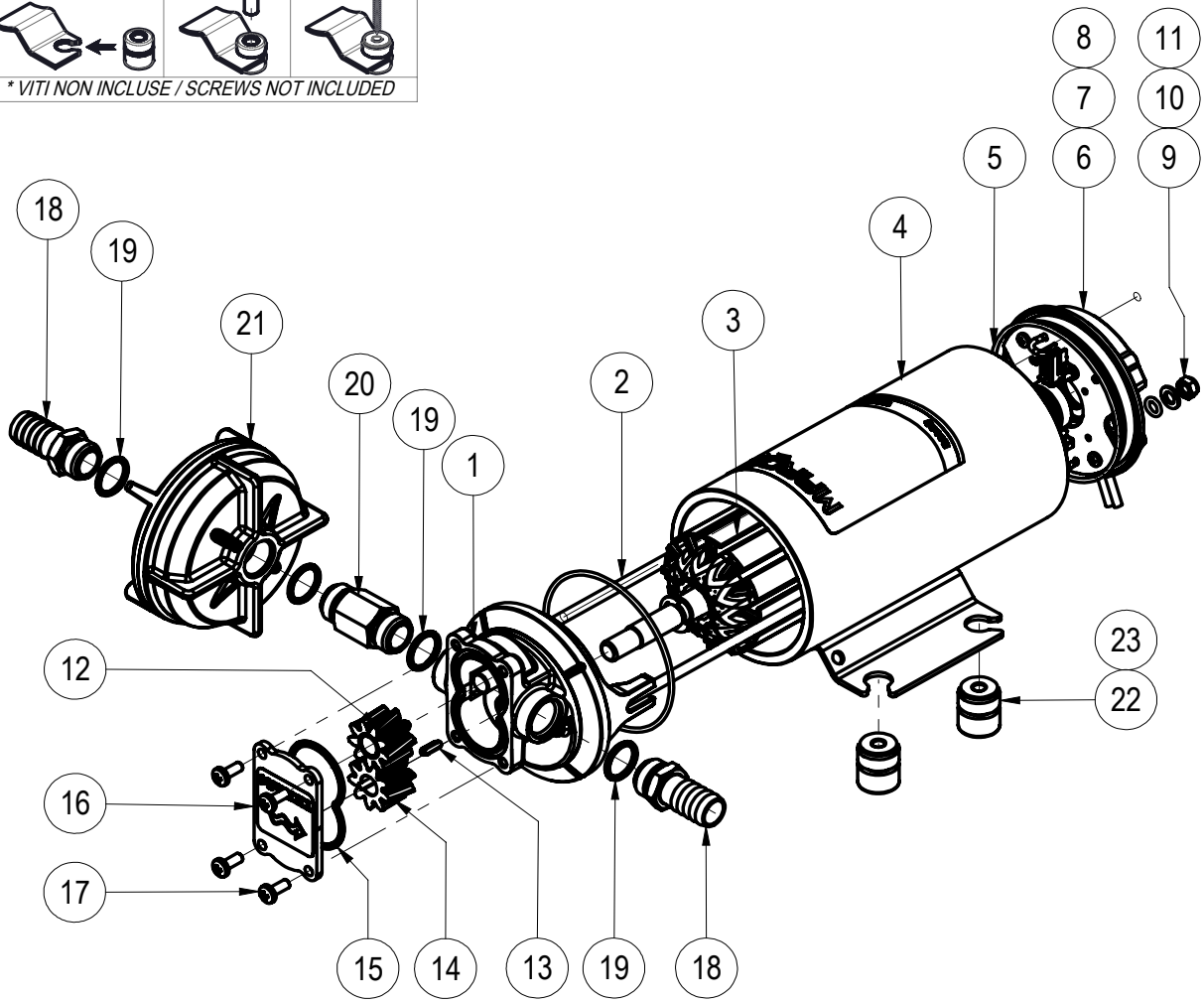

© MARCO S.p.A.

DIMENSIONS

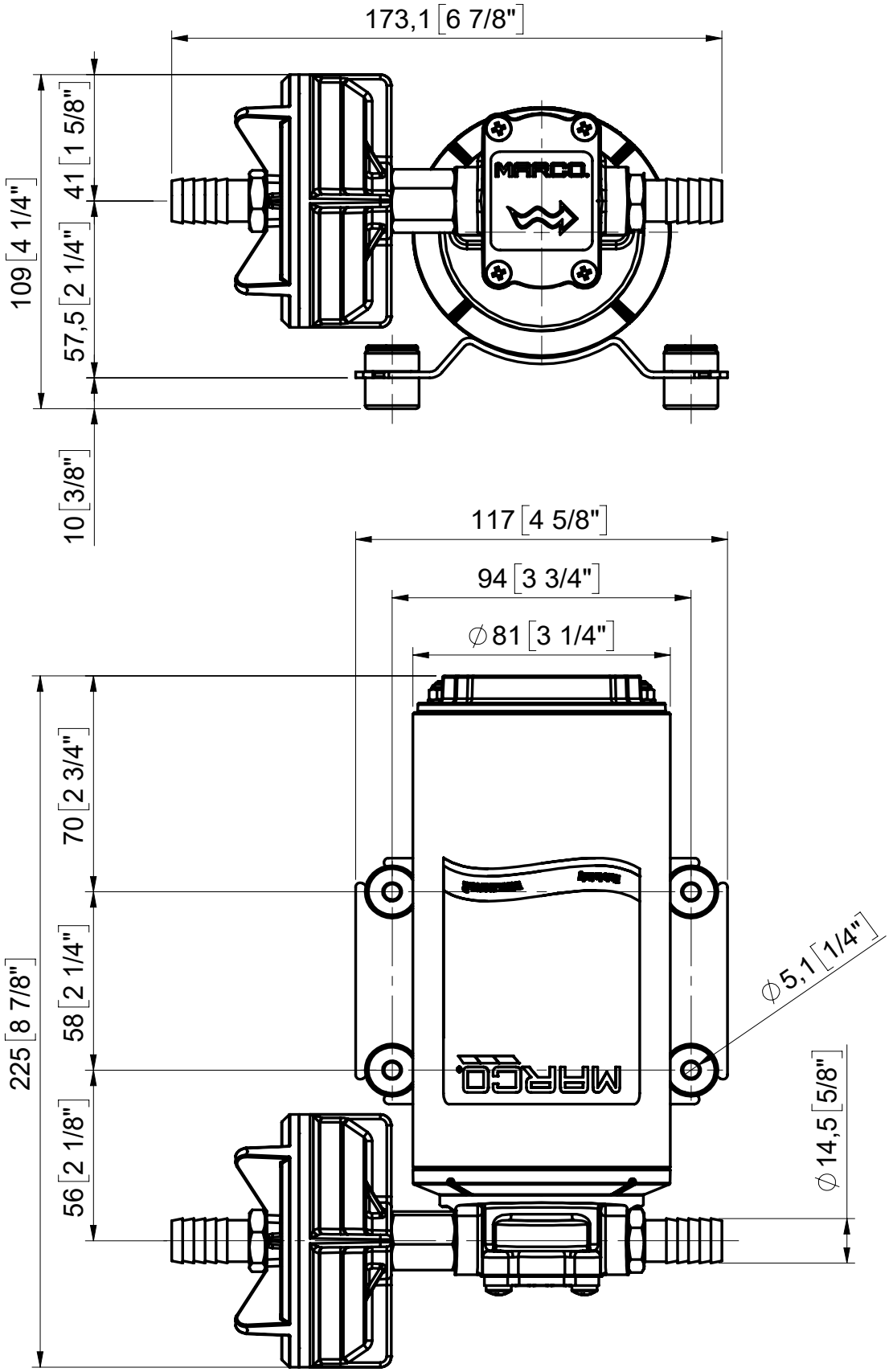

© MARCO S.p.A.

DIAGRAMS

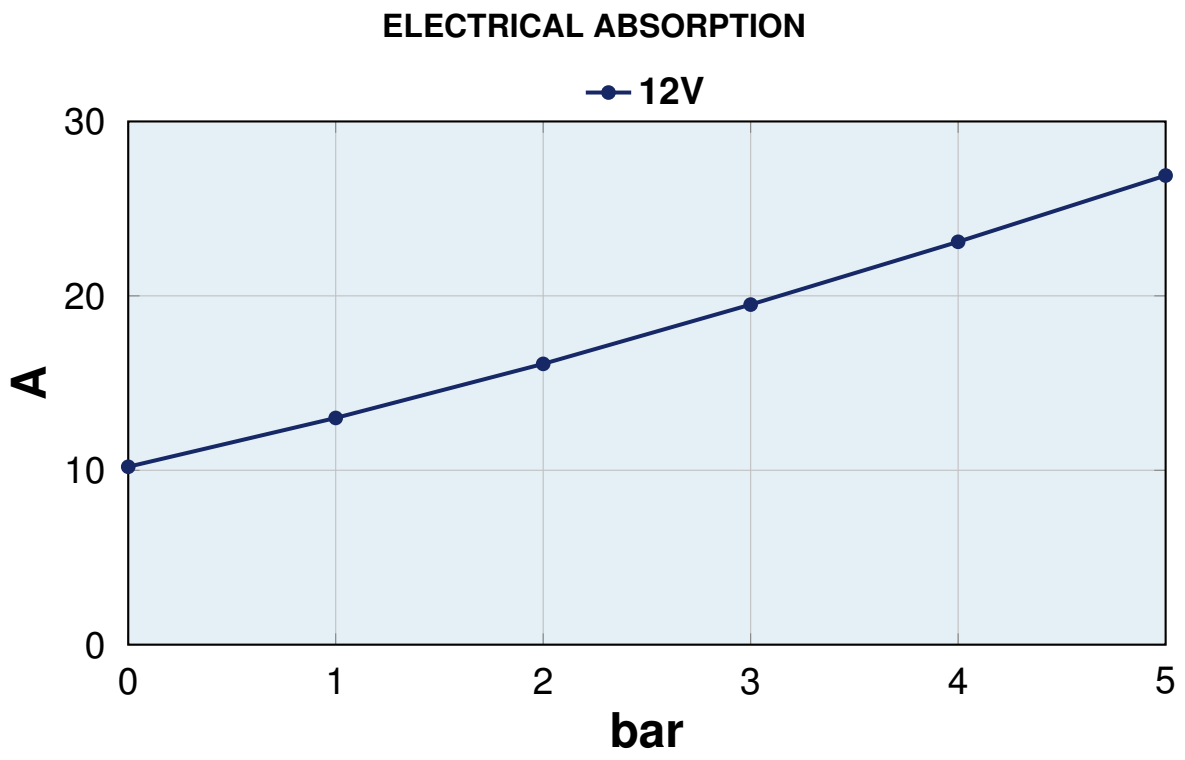

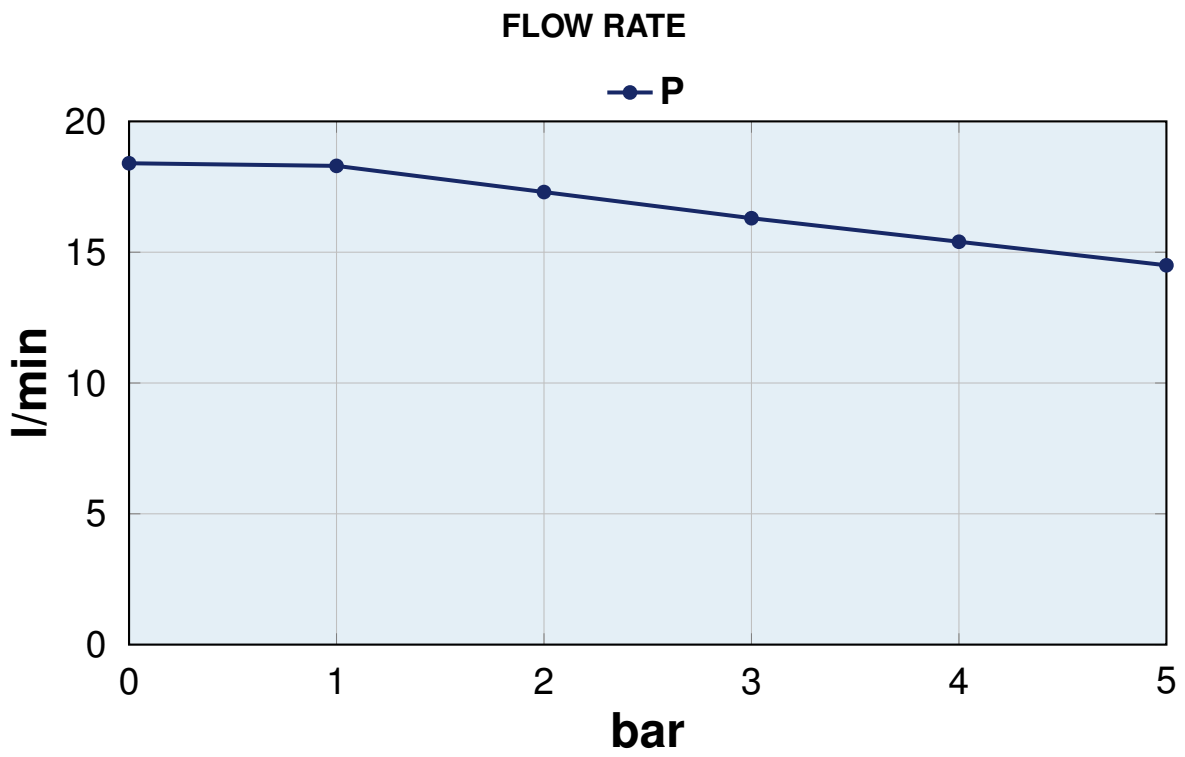

© MARCO S.p.A.

E.C. DECLARATION OF CONFORMITY

We confirm that the product:

16440212 - UP10-P heavy duty pump 18 l/min - PEEK gears - FKM O-Rings / *gear pump*

is in conformity with the Directive 2014/30/EU (ex.2004/108/EC) relating to electromagnetic compatibility and with the Directive 2006/42/EC relating to the machines.

This declaration is valid for all products which are produced in accordance with the technical documentation which is a part of this declaration. For verification of conformity with regard to the Electromagnetic Compatibility the following standards are applied:

EN 55014-1	Electromagnetic compatibility. Requirements for household appliances, electric tools, and similar apparatus. Part 1: Emission.

This declaration is given under the sole responsibility of:

MARCO S.P.A.
Via Mameli 10 - 25014 Castenedolo - Brescia - Italy
Tel. 030/2134.1 Fax 030/2134.300

© MARCO S.p.A.

NOTES

© MARCO S.p.A.

© MARCO S.p.A.

Italiano

English

Property of MARCO S.p.A reproduction prohibited.
All rights reserved.
For further information visit our web site - www.marco.it
MARCO S.p.A Via Mameli 10 - 25014 Castenedolo (Brescia) - Italy
tel. +39 030 2134.1 / Fax +39 030 2134.300

© MARCO S.p.A.